6 Partial Differential Equations

Although the title of this chapter is general, it will be concerned only with the most important examples of partial differential equations of interest to physicists and chemists. Fortunately, the equations involved in virtually all of these applications can be solved by the very powerful method of separation of variables.

A partial differential equation is one with two or more independent variables. The separation of these variables, if it can be carried out, yields ordinary differential equations which can, in most cases, be solved by the various methods presented in Chapters 3 and 5. The general approach to this problem will now be illustrated by a number of examples that are fundamental in physics and chemistry.

6.1 THE VIBRATING STRING

Consider a flexible string of length ℓ that is stretched between two points by a constant tension τ. It will be assumed that the tension is sufficient so that the effect of gravity can be neglected. Furthermore, the string is uniform, with a density (mass per unit length) equal to ρ. The x axis is chosen along the direction of the string at rest and the displacement of the string is in the y direction.

6.1.1 The wave equation

Now consider the displacement of a segment of the string, Δs, as shown in Fig. 1. Its mass is equal to $\rho\Delta s$ and, according to Newton's second law of motion,

$$\tau_y(x + \Delta x) - \tau_y(x) = \rho\Delta s\frac{\partial^2 y}{\partial t^2}, \tag{1}$$

where $\partial^2 y/\partial t^2$ is its acceleration in the y direction. From Fig. 1 [see also Eq.(3-51)],

$$(\Delta s)^2 = (\Delta x)^2 + (\Delta y)^2 = (\Delta x)^2 + \left(\Delta x\frac{\partial y}{\partial x}\right)^2 \approx (\Delta x)^2, \tag{2}$$

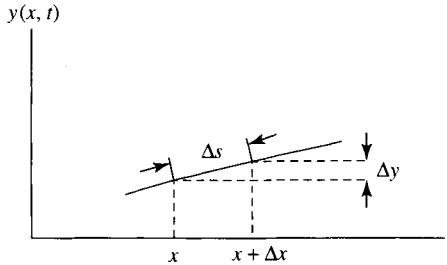

Fig. 1 Segment of a string.

as in the limit of small displacements, the slope approaches zero. Furthermore, in this limit $\tau_y = \tau \partial y/\partial x$ and $\tau_x \approx \tau$. Then Eq. (1) becomes

$$\tau\left[\left(\frac{\partial y}{\partial x}\right)_{x+\Delta x} - \left(\frac{\partial y}{\partial x}\right)_x\right] = \tau \Delta x \frac{\partial^2 y}{\partial x^2} = \rho \Delta x \frac{\partial^2 y}{\partial t^2}, \tag{3}$$

or,

$$\frac{\partial^2 y}{\partial x^2} = \frac{1}{c^2}\frac{\partial^2 y}{\partial t^2}. \tag{4}$$

The quantity $c = \sqrt{\tau/\rho}$ is known as the phase velocity. It is the speed at which waves travel along the string. Clearly, the left-hand side of Eq. (4) represents the one-dimensional Laplacian operating on the dependent variable. This expression can be easily generalized to represent wave phenomena in two or more dimensions in space.

6.1.2 Separation of variables

In the application of the method of separation of variables to Eq. (4), it is assumed, without initial justification, that the dependent variable can be written as a product, *viz.*

$$y(x, t) = X(x)\vartheta(t). \tag{5}$$

Substitution of Eq. (5) into Eq. (4) yields

$$c^2\vartheta(t)\frac{\mathrm{d}^2 X(x)}{\mathrm{d}x^2} = X(x)\frac{\mathrm{d}^2\vartheta(t)}{\mathrm{d}t^2}, \tag{6}$$

which, after division by $y(x, t) = X(x)\vartheta(t)$, becomes

$$\frac{c^2}{X(x)}\frac{\mathrm{d}^2 X(x)}{\mathrm{d}x^2} = \frac{1}{\vartheta(t)}\frac{\mathrm{d}^2\vartheta(t)}{\mathrm{d}t^2}. \tag{7}$$

The left-hand side of Eq. (7) does not depend on the time t; it is only a function of the coordinate x. On the other hand, the right-hand side of this equation depends only on the time. As t and x are independent variables, each side of Eq. (7) must be equal to a constant. Furthermore, it must be the same constant, if Eq. (7) is to hold. This argument, which will be employed often in subsequent examples, is the basis of the method of the separation of variables. Clearly, the constant in question can be chosen at will. For convenience in this example, it will be set equal to $-\omega^2$.

The method illustrated above allows Eq. (7) to be decomposed into two ordinary differential equations, namely,

$$\frac{d^2\vartheta(t)}{dt^2} + \omega^2\vartheta(t) = 0 \tag{8}$$

and

$$\frac{d^2X(x)}{dx^2} + \frac{\omega^2}{c^2}X(x) = 0. \tag{9}$$

These two equations, which have the same form, have already been solved (see Section 5.2). One form of the general solution in each case is

$$\vartheta(t) = A\,sin\,\omega t + B\,cos\,\omega t \tag{10}$$

and

$$X(x) = C\,sin\left(\frac{\omega x}{c}\right) + D\,cos\left(\frac{\omega x}{c}\right), \tag{11}$$

respectively. The constants A and B appearing in Eq. (10) are of course the two arbitrary constants of integration arising from the general solution to the second-order differential equation for t. These constants can only be evaluated with the aid of the appropriate initial conditions.

6.1.3 Boundary conditions

In the present example it will be assumed that the string is fixed at each end, as is the case for musical instruments such as the violin and the guitar. Clearly, the string cannot vibrate at its ends; thus, $X(0) = 0$ and $X(\ell) = 0$ for a string of length ℓ (see Fig. 2). These conditions are imposed on the general solution in order to determine the constants of integration. From Eq. (11) it is evident that $X(0) = D = 0$. However, the remaining solution is $X(x) = C\,sin(\omega x/c)$, which must vanish at the other end of the string, where $x = \ell$. Clearly, C cannot be equated to zero, as the resulting solution is trivial; that is, $X(x) = 0$ for all values of x. However, as shown in Section 5.4.1, if the argument of sine is replaced by $n\pi x/\ell$, the condition $X(\ell) = 0$ will be fulfilled if n

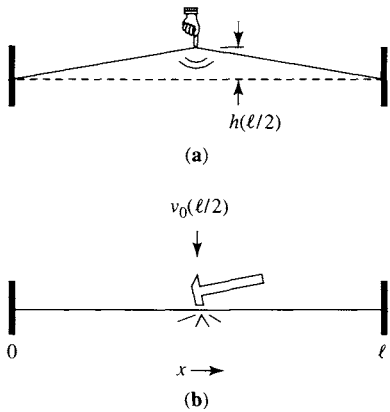

Fig. 2 String with fixed ends: (**a**) the plucked string; (**b**) the struck string.

is an integer. Thus, the solution for the spatial part of the problem is of the form

$$X(x) = C\,sin\left(\frac{n\pi x}{\ell}\right). \tag{12}$$

Equation (12) represents a standing wave in space with a wavelength λ determined by the condition $2\pi x/\lambda = n\pi x/\ell$ or $\lambda = 2\ell/n$. This result is, aside from notation, the same as that obtained for the quantum mechanical problem of the particle in a box [see Eq. (5-68) and Fig. 5-4a]. It should be noted that the vibrations of the string are quantized, although the problem is a classical one. The quantization arises in both classical and quantum-mechanical cases from the boundary conditions. The integers n, which arise naturally, determine the characteristic values – or often, eigenvalues (German: *Eigenwerte*). The corresponding functions, given in this case by Eq. (12), are the eigenfunctions. This subject will be developed in more detail in the following chapter.

A particular solution to Eq. (5) can now be written as

$$y_n(x,t) = X_n(x)\vartheta_n(t) = sin\left(\frac{n\pi x}{\ell}\right)\left[A_n'\,sin\left(\frac{n\pi ct}{\ell}\right) + B_n'\,cos\left(\frac{n\pi ct}{\ell}\right)\right], \tag{13}$$

where the coefficient C has been absorbed in the new constants, A_n' and B_n'. The general solution is then given by

$$y(x,t) = \sum_{n=1}^{\infty} y_n(x,t) = \sum_{n=1}^{\infty} sin\left(\frac{n\pi x}{\ell}\right)\left[A_n'\,sin\left(\frac{n\pi ct}{\ell}\right) + B_n'\,cos\left(\frac{n\pi ct}{\ell}\right)\right]. \tag{14}$$

6.1.4 Initial conditions

The remaining arbitrary constants A'_n and B'_n are determined by the initial conditions. They depend on the manner in which the string is put into oscillation, as treated in Section 5.2.2 for the oscillation of the classical pendulum. There were two simple possibilities illustrated: (i) corresponds to a plucked string (as in the guitar) and leads to Eq. (5-36), while (ii) describes the action of a hammer in the piano, which strikes a string; the mathematical expression in this case is given by Eq. (5-38). These methods of exciting the vibration of the string are shown in Fig. 2.

With these ideas on mind, Eq. (14) can now be considered more generally. With the application of condition (i) at $t = 0$

$$y(x, 0) = \sum_{n=1}^{\infty} B'_n \, sin\left(\frac{n\pi x}{\ell}\right). \tag{15}$$

This expression represents the expansion of an arbitrary function $y(x, 0)$ in a series of sines.* To determine the coefficient B'_n, multiply both sides of Eq. (15) by $sin(m\pi x/\ell)$ and integrate from $x = 0$ to $x = \ell$. Then,

$$\int_0^{\ell} y(x, 0) \, sin\left(\frac{n\pi x}{\ell}\right) dx = \sum_{n=1}^{\infty} B'_n \int_0^{\ell} sin\left(\frac{n\pi x}{\ell}\right) sin\left(\frac{m\pi x}{\ell}\right) dx. \tag{16}$$

With m an integer the use of the relations

$$\int_0^{\ell} sin\left(\frac{n\pi x}{\ell}\right) sin\left(\frac{m\pi x}{\ell}\right) dx = \begin{cases} 0, & \text{if } n \neq m \\ \ell/2, & \text{if } n = m \end{cases}, \tag{17}$$

yields the expression

$$B'_n = \frac{2}{\ell} \int_0^{\ell} y(x, 0) \, sin\left(\frac{n\pi x}{\ell}\right) dx. \tag{18}$$

The arbitrary constant B'_n is thus determined in the general solution given by Eq. (14). See problem 1.

As for the second arbitrary constant, recourse is made to condition (ii) above. Namely,

$$\dot{y}(x, 0) = v_0(x) = \sum_{n=1}^{\infty} \frac{n\pi c}{\ell} A'_n \, sin\left(\frac{n\pi x}{\ell}\right), \tag{19}$$

*Equation (15) is an example of a Fourier series [Joseph Fourier, French mathematician (1768–1830)].

where $\dot{y}(x,0) = 0$ is the initial velocity. By a procedure similar to that employed above, the coefficients A'_n are found to be

$$A'_n = \frac{2}{n\pi c}\int_0^{\ell} v_0(x)\, sin\left(\frac{n\pi x}{\ell}\right) dx \tag{20}$$

(problem 3). From Eqs. (18) and (20) it is evident that if the string has no initial velocity, the constants A'_n are equal to zero, while if the string has no initial displacement, the constants B'_n are equal to zero.

Each term in Eq. (14) represents a standing wave. For each value of n the frequency of vibration is given by

$$\nu_n^0 = \frac{nc}{2\ell} = \frac{n}{2\ell}\sqrt{\frac{\tau}{\rho}}. \tag{21}$$

The fundamental vibrational frequency is that with $n = 1$, while the frequencies of the harmonics or overtones are obtained with $n = 2, 3, 4 \ldots$. Specifically, $n = 2$ is called the "second harmonic" in electronics and the "first overtone" in musical acoustics. Both terms are employed, often erroneously, in the description of molecular vibrations (see Chapter 9).

As an example of the application of condition (i) above, consider the plucked string (see Fig. 2). The string is displaced at its midpoint by a distance h and released at $t = 0$. Thus, the initial conditions are

$$y(x,0) = \begin{cases} 2hx/\ell & 0 < x < \ell/2 \\ 2h(\ell - x)/\ell & \ell/2 < x < \ell \end{cases} \tag{22}$$

and $\dot{y}(x,0) = 0$. Substitution of Eq. (22) in Eq. (18) yields the relation

$$B'_n = \frac{2}{\pi}\left[\int_0^{\ell/2} \frac{2hx}{\ell}\, sin\left(\frac{n\pi x}{\ell}\right) dx + \int_{\ell/2}^{\ell} \frac{2h}{\ell}(\ell - x)\, sin\left(\frac{n\pi x}{\ell}\right) dx\right] \tag{23}$$

$$= \frac{8h}{\pi^2 n^2}\, sin\left(\frac{\pi n}{2}\right), \qquad \text{(with } n \text{ odd)} \tag{24}$$

for the integration constant. These results can be substituted into Eq. (14) to obtain

$$y(x,t) = \frac{8h}{\pi^2}\left[sin\left(\frac{\pi x}{\ell}\right) cos\left(\frac{\pi ct}{\ell}\right) - \frac{1}{9}\, sin\left(\frac{3\pi x}{\ell}\right) cos\left(\frac{3\pi ct}{\ell}\right) + \ldots\right], \tag{25}$$

which describes the vibration of the string after release from its initial position (problem 2). The first term represents the fundamental vibration, while

the second corresponds to the second overtone ($n = 3$). The latter has an amplitude which is one ninth that of the fundamental, and thus a relative intensity of 1/81. The odd overtones (even harmonics), which have nodes in the center, are not excited because the string was plucked at that point (see Fig. 5-4a).

As musicians know, it is the relative intensities of the various members of the overtone series that determine the timbre or tone quality of sound. It is easy to distinguish the sound of a flute from that of the clarinet, although the listener may not know why. The sound of the flute has a relatively intense first overtone, while the boundary conditions imposed on the vibrating air column in the clarinet result in the suppression of all odd overtones. Such phenomena are of course much easier to visualize on a stringed instrument. Ask a violinist for a demonstration of the natural harmonics of a given string.

6.2 THE THREE-DIMENSIONAL HARMONIC OSCILLATOR

The classical harmonic oscillator in one dimension was illustrated in Section 5.2.2 by the simple pendulum. Hooke's law was employed in the form $f = -\kappa x$ where f is the force acting on the mass and κ is the force constant. The force can also be expressed as the negative gradient of a scalar potential function, $V(x) = \frac{1}{2}\kappa x^2$, for the problem in one dimension [Eq. (4-88)]. Similarly, the three-dimensional harmonic oscillator in Cartesian coordinates can be represented by the potential function

$$V(x, y, z) = \tfrac{1}{2}\kappa_x x^2 + \tfrac{1}{2}\kappa_y y^2 + \tfrac{1}{2}\kappa_z z^2, \tag{26}$$

where the force constants κ_x, κ_y and κ_z define Hooke's law in the corresponding directions.

6.2.1 Quantum-mechanical applications

In the analogous quantum-mechanical problem the kinetic energy of the system is represented by the operator $-(\hbar^2/2m)\nabla^2$, as developed in the following chapter. Its one-dimensional analog was already employed in Eq. (5-64). Thus, the Schrödinger equation for the three-dimensional harmonic oscillator is given by

$$-\frac{\hbar^2}{2m}\nabla^2\psi(x, y, z) + (\tfrac{1}{2}\kappa_x x^2 + \tfrac{1}{2}\kappa_y y^2 + \tfrac{1}{2}\kappa_z z^2)\psi(x, y, z) = \varepsilon\psi(x, y, z). \tag{27}$$

With the Laplacian written in Cartesian coordinates, Eq. (27) becomes

$$\left(-\frac{\hbar^2}{2m}\frac{\partial^2}{\partial x^2}+\frac{1}{2}\kappa_x x^2\right)\psi(x,y,z)+\left(-\frac{\hbar^2}{2m}\frac{\partial^2}{\partial y^2}+\frac{1}{2}\kappa_y y^2\right)\psi(x,y,z)$$
$$+\left(-\frac{\hbar^2}{2m}\frac{\partial^2}{\partial z^2}+\frac{1}{2}\kappa_z z^2\right)\psi(x,y,z)=\varepsilon\psi(x,y,z). \tag{28}$$

The separation of variables is accomplished by substituting

$$\psi(x,y,z)=X(x)Y(y)Z(z) \tag{29}$$

and dividing by the same expression. The result is

$$\frac{1}{X(x)}\left(-\frac{\hbar^2}{2m}\frac{\partial^2}{\partial x^2}+\frac{1}{2}\kappa_x x^2\right)X(x)+\frac{1}{Y(y)}\left(-\frac{\hbar^2}{2m}\frac{\partial^2}{\partial y^2}+\frac{1}{2}\kappa_y y^2\right)Y(y)$$
$$+\frac{1}{Z(z)}\left(-\frac{\hbar^2}{2m}\frac{\partial^2}{\partial z^2}+\frac{1}{2}\kappa_z z^2\right)Z(z)=\varepsilon. \tag{30}$$

Each term on the left-hand side of Eq. (30) is a function of only a single independent variable. Each term is, therefore, equal to a constant, such that $\varepsilon_x+\varepsilon_y+\varepsilon_z=\varepsilon$. The first term is identified as

$$\frac{1}{X(x)}\left(-\frac{\hbar^2}{2m}\frac{\partial^2}{\partial x^2}+\frac{1}{2}\kappa_x x^2\right)X(x)=\varepsilon_x, \tag{31}$$

an ordinary, second-order differential equation. Analogous relations for the terms in y and z are easily obtained.

To put Eq. (31) into a recognizable form, it is convenient to change the independent variable by substituting $\xi=2\pi x\sqrt{\nu_x^0 m/h}$, where $\nu_x^0=\sqrt{\kappa_x/m}/2\pi$ is the classical frequency of oscillation in the x direction (see Section 5.2.2). Then with $\sigma=2\varepsilon_x/h\nu_x^0$, Eq. (31) becomes

$$\frac{\partial^2 X(\xi)}{\partial\xi^2}+(\sigma-\xi^2)X(\xi)=0, \tag{32}$$

which, aside from notation, is the same as Eq. (5-82). Its solution can then be expressed in terms of the Hermite polynomials, with the energy given by Eq. (5-92) in the form

$$\varepsilon_x=h\nu_x^0(v_x+\tfrac{1}{2}), \tag{33}$$

where $v_x=0,1,2,\ldots$, the vibrational quantum number in the x direction. Clearly, the same procedure can be applied to the equations for $Y(y)$ and $Z(z)$,

with similar results. The total energy for the three-dimensional oscillator is then given by

$$\varepsilon = h\nu_x^0(v_x + \tfrac{1}{2}) + h\nu_y^0(v_y + \tfrac{1}{2}) + h\nu_z^0(v_z + \tfrac{1}{2}). \tag{34}$$

6.2.2 Degeneracy

An example of the application of Eq. (34) is shown in Fig. 3, where the energy has been calculated for various values of the three (independent) quantum numbers v_x, v_y and v_z. The classical vibrational frequencies were chosen so that $v_x + v_y + v_z =$ constant. Thus, the minimum energy, that of the ground state (0, 0, 0), is obtained when all three quantum numbers are equal to zero and is the same for all combinations shown in Fig. 3. In the first case, in which $\nu_x^0 \neq \nu_y^0 \neq \nu_z^0$ the frequencies were arbitrarily chosen in the proportion $v_x : v_y : v_z = 1.0 : 1.1 : 1.2$. The resulting energy levels are shown in the figure. It should be noted that on several cases, *e.g.* the levels 0, 2, 0; 1, 0, 1, two different combinations of the three quantum numbers yield the same value for the energy. These levels are said to be degenerate, that is, two different wavefunctions yield exactly the same energy. In this case the degeneracy is

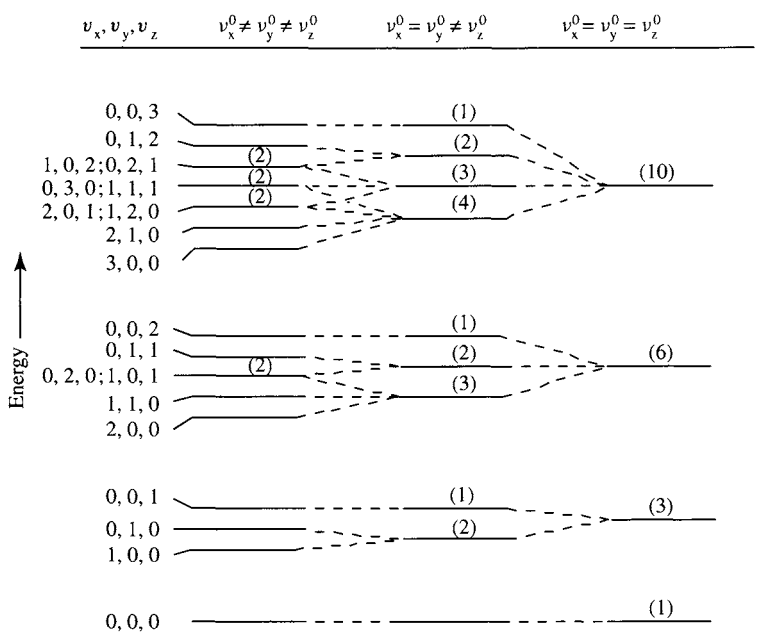

Fig. 3 Energy levels of the three-dimensional harmonic oscillator. The degree of degeneracy of each level is shown in parenthesis.

due to the particular values of the vibrational frequencies, so it is called an "accidental" degeneracy. Since two different wavefunctions contribute to the degenerate pair, the level is doubly degenerate, as indicated by (2) in Fig. 3.

A second combination of the vibrational frequencies is that in which $\nu_x^0 = \nu_y^0 \neq \nu_z^0$. The calculated energy levels are shown in the second column of Fig. 3. Here, the proportion of the vibrational frequencies has been chosen to be $v_x : v_y : v_z = 1.05 : 1.05 : 1.2$. The system now has a natural symmetry, since the two directions x and y are equivalent. The result is an increase in the degeneracy of the vibrational levels, an important consequence of the symmetry of the problem.

Finally, the combination for which $\nu_x^0 = \nu_y^0 = \nu_z^0$ corresponds to an isotropic potential, one in which the three spatial directions are equivalent. The resulting energy levels are shown in the last column of Fig. 3, where the vibrational frequencies have been chosen in the proportions $v_x : v_y : v_z = 1.1 : 1.1 : 1.1$. The degree of degeneracy for each energy level is shown in parentheses. Clearly, the increased degeneracy of the system is the result of the increased symmetry. This problem will be analyzed with the aid of the theory of groups in Chapter 8.

The energy of the isotropic harmonic oscillator in three dimensions can be written as

$$\varepsilon = h\nu^0(v_x + v_y + v_z + \tfrac{3}{2}) = h\nu^0(v + \tfrac{3}{2}) \tag{35}$$

where $v = v_x + v_y + v_z$. Thus, for a given value of v, v_x can take the values $v_x = 0, 1, 2, \ldots v$, or $v + 1$ different values. Then, $v_y = 0, 1, 2, \ldots v - v_x$, that is, $v + 1 - v_x$ values, leaving only one possibility for v_z, namely, $v_z = v - v_x - v_y$. Hence the total number of combinations of the three quantum numbers for a given value of v is given by

$$\begin{aligned}\sum_{v_x=0}^{v}(v + 1 - v_x) &= (v + 1)\sum_{v_x=0}^{v} 1 - \sum_{v_x=0}^{v} v_x = (v + 1)(v + 1) - \frac{v(v + 1)}{2} \\ &= (v + 1)\left(\frac{v}{2} + 1\right).\end{aligned} \tag{36}$$

This expression* has been used to calculate the degeneracies shown in parentheses in the last column of Fig. 3.

*Note the general relations $\sum_{k=0}^{n} 1 = n + 1$ and $\sum_{k=0}^{n} k = n(n + 1)/2$ that were used in deriving Eq. (36).

6.3 THE TWO-BODY PROBLEM

6.3.1 Classical mechanics

Consider a system composed of two particles of masses m_1 and m_2 in three dimensions. Three coordinates are necessary to specify the position of each particle. In a Cartesian coordinate system the total energy can be written as

$$\varepsilon = \frac{m_1}{2}(\dot{x}_1^2 + \dot{y}_1^2 + \dot{z}_1^2) + \frac{m_2}{2}(\dot{x}_2^2 + \dot{y}_2^2 + \dot{z}_2^2) + V(x_1, y_1, z_1, x_2, y_2, z_2), \quad (37)$$

where the first two terms in Eq. (37) represent the classical kinetic energy of the system and the third the potential energy. The positions of the particles with respect to the origin fixed in space (O in Fig. 4) are specified by the vectors $\boldsymbol{r}_1$ and $\boldsymbol{r}_2$, whose components are x_1, y_1, z_1 and x_2, y_2, z_2, respectively. The position of the center of mass (cm) is defined by the relation $|\boldsymbol{a}_1|m_1 = |\boldsymbol{a}_2|m_2$. The vector $\boldsymbol{r} = \boldsymbol{a}_1 + \boldsymbol{a}_2$ represents the separation between the two particles, which have here been assumed to be spherical. Thus, the relations $\boldsymbol{a}_1 = [m_2/(m_1 + m_2)]\boldsymbol{r}$ and $\boldsymbol{a}_2 = [m_1/(m_1 + m_2)]\boldsymbol{r}$ define the center of mass of the two-particle system. By inspection of the two triangles in Fig. 4 the following vector relations are easily established: $\boldsymbol{R} = \boldsymbol{r}_1 + \boldsymbol{a}_1$ and $\boldsymbol{R} = \boldsymbol{r}_2 - \boldsymbol{a}_2$. Substitution for $\boldsymbol{a}_1$ and $\boldsymbol{a}_2$ leads to the expressions

$$\boldsymbol{r}_1 = \boldsymbol{R} - \frac{m_2}{m_1 + m_2}\boldsymbol{r} \quad (38)$$

and

$$\boldsymbol{r}_2 = \boldsymbol{R} + \frac{m_1}{m_1 + m_2}\boldsymbol{r}. \quad (39)$$

In terms of components, Eqs. (38) and (39) correspond to six relations such as

$$x_1 = X - \frac{\mu}{m_1}x \quad (40)$$

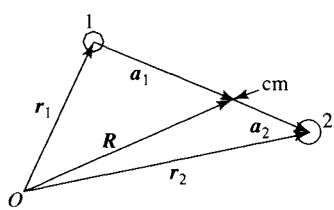

Fig. 4 The two-body problem.

and

$$x_2 = X + \frac{\mu}{m_2}x, \tag{41}$$

where X, Y, Z are the Cartesian components of the vector $\boldsymbol{R}$ which specify the position of the center of mass. Analogous relations are easily written for the other components. The reduced mass, defined by $\mu = m_1 m_2/(m_1 + m_2)$, has been introduced in Eqs. (40) and (41). From Eq. (37) the kinetic energy is given by

$$T = \frac{m_1}{2}(\dot{x}_1^2 + \dot{y}_1^2 + \dot{z}_1^2) + \frac{m_2}{2}(\dot{x}_2^2 + \dot{y}_2^2 + \dot{z}_2^2)$$

or

$$T = \frac{\mu}{2}(\dot{x}^2 + \dot{y}^2 + \dot{z}^2) + \frac{M}{2}(\dot{X}^2 + \dot{Y}^2 + \dot{Z}^2), \tag{42}$$

after substitution of the time derivatives of Eqs. (40) and (41) and writing the total mass as $M = m_1 + m_2$. The kinetic energy can equally be expressed in terms of the momenta. Thus, the components of the conjugate momenta are of the form

$$p_x \equiv \frac{\partial T}{\partial \dot{x}} = \mu \dot{x}, \tag{43}$$

and similarly for the five others. Their substitution in Eq. (42) results in an expression for the kinetic energy as a function of the momenta. This step is essential before the transformation of the classical formulation into the quantum-mechanical one. The result in this case is given by

$$T = \frac{\boldsymbol{p}^2}{2\mu} + \frac{\boldsymbol{P}^2}{2M} \tag{44}$$

(problem 6).

The classical kinetic energy of the system has now been separated into the effect of displacement of the center of mass of the system, with momentum $\boldsymbol{P}$ and that of the relative movement of the two particles, with momentum $\boldsymbol{p}$. In the absence of external forces, the interaction of the two (spherical) particles is only a function of their separation, $\boldsymbol{r}$. That is, the potential function appearing in Eq. (37) depends only on the "internal" coordinates x, y, z.

6.3.2 Quantum mechanics

In the quantum mechanical applications of the two-body problem, the classical energy of the system becomes the Hamiltonian operator.* The conversion

*William Rowan Hamilton, Irish mathematician and astronomer (1805–1865).

is accomplished by replacing each momentum vector by the corresponding operator, as shown in the following chapter, *viz.*

$$\boldsymbol{p} \to \frac{\hbar}{i}\nabla_{x,y,z} \tag{45}$$

and

$$\boldsymbol{P} \to \frac{\hbar}{i}\nabla_{X,Y,Z}. \tag{46}$$

Substitution in Eq. (44) yields the Hamiltonian for this problem,

$$\hat{H} = \hat{T} + V(x, y, z) = -\frac{\hbar^2}{2\mu}\nabla^2_{x,y,z} - \frac{\hbar^2}{2M}\nabla^2_{X,Y,Z} + V(x, y, z). \tag{47}$$

The Schrödinger equation, with ε the total energy, is then

$$\hat{H}\varsigma(x, y, z, X, Y, Z) = \varepsilon\varsigma(x, y, z, X, Y, Z). \tag{48}$$

It can be separated by the substitution

$$\varsigma(x, y, z, X, Y, Z) = \psi(x, y, z)\vartheta(X, Y, Z), \tag{49}$$

followed by division by the same function. The result can be written in the form

$$\begin{aligned} &-\frac{1}{\psi(x, y, z)}\frac{\hbar^2}{2\mu}\nabla^2_{x,y,z}\psi(x, y, z) + V(x, y, z) \\ &-\frac{\hbar^2}{\vartheta(X, Y, Z)2M}\nabla^2_{X,Y,Z}\vartheta(X, Y, Z) = \varepsilon \end{aligned} \tag{50}$$

The first two terms on the left-hand side of Eq. (50) are functions only of the internal coordinates, while the third term depends only on the external coordinates X, Y, Z. Therefore, each must be equal to a constant, such that their sum is equal to ε. Thus, if

$$-\frac{1}{\psi(x, y, z)}\frac{\hbar^2}{2\mu}\nabla^2_{x,y,z}\psi(x, y, z) + V(x, y, z) = \varepsilon_{int}, \tag{51}$$

$$-\frac{\hbar^2}{\vartheta(X, Y, Z)2M}\nabla^2_{X,Y,Z}\vartheta(X, Y, Z) = \varepsilon - \varepsilon_{int} = \varepsilon_{ext}, \tag{52}$$

and the separation of the internal and external coordinates has been accomplished. After multiplication of Eq. (52) by $\vartheta(X, Y, Z)$ it can be recognized as the Schrödinger equation for a free particle of mass $M = m_1 + m_2$ and

energy equal to ε_{ext}. This energy is not quantized unless boundary conditions are applied. The problem can be further separated into equations for the particle in each Cartesian direction. It should be noted that the separation of variables to yield Eqs. (51) and (52) is only possible because the potential function for the free particle is independent of the external coordinates.

Multiplication of Eq. (51) by $\psi(x, y, z)$ yields the Schrödinger equation for the relative movement of the two particles. However, the Cartesian coordinates employed are not "natural" for this problem. In particular, if, as has been assumed, the particles are spherical, the interaction potential depends only on their distance of separation, r. The problem then reduces to the movement of a hypothetical particle of mass μ in the central field of a potential $V(r)$. The various applications of this result depend specifically on the form of this potential function.

6.4 CENTRAL FORCES

6.4.1 Spherical coordinates

With Eq. (51) written in the form

$$\left[-\frac{\hbar^2}{2\mu}\nabla^2_{x,y,z} + V(r)\right]\psi(x, y, z) = \varepsilon_{int}\psi(x, y, z), \tag{53}$$

it is now necessary to convert the Laplacian operator into spherical polar coordinates, which correspond to the symmetry of the potential function. This operation can be carried out by direct substitution of the relations

$$\begin{aligned} x &= r\,sin\,\theta\,cos\,\varphi \\ y &= r\,sin\,\theta\,sin\,\varphi \\ z &= r\,cos\,\theta, \end{aligned} \tag{54}$$

where the new coordinates r, θ, φ are defined in Fig. 5. The direct change of variables is given in Appendix V. However, the method developed in Chapter 4 is much easier. With the use of Eq. (54) the appropriate scale factors calculated from Eq. (4-73) are: $h_r = 1, h_\theta = r$ and $h_\varphi = r\,sin\,\theta$. Substitution of these quantities in Eq. (4-100) leads directly to the result

$$\nabla^2_{r,\theta,\varphi} = \frac{1}{r^2}\left[\frac{\partial}{\partial r}\left(r^2\frac{\partial}{\partial r}\right) + \frac{1}{sin\,\theta}\frac{\partial}{\partial\theta}\left(sin\,\theta\frac{\partial}{\partial\theta}\right) + \frac{1}{sin^2\theta}\frac{\partial^2}{\partial\varphi^2}\right] \tag{55}$$

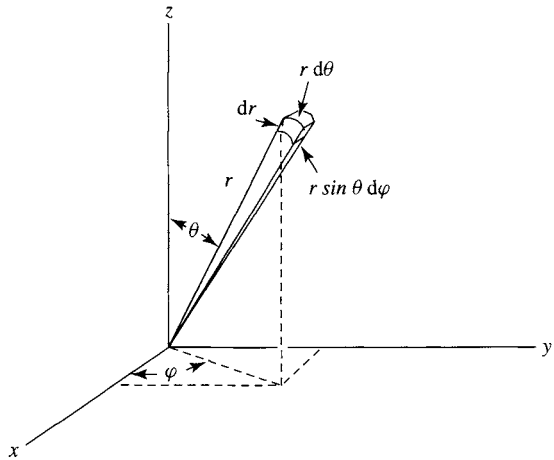

Fig. 5 Spherical coordinates.

for the Laplacian operator and

$$d\tau = h_r h_\theta h_\varphi dr d\theta d\varphi = r^2 \sin\theta dr d\theta d\varphi \tag{56}$$

for the volume element [see Eq. (4-96)].

Equation (52) can now be rewritten in spherical coordinates as

$$\left\{-\frac{\hbar^2}{2\mu r^2}\left[\frac{\partial}{\partial r}\left(r^2\frac{\partial}{\partial r}\right)+\frac{1}{\sin\theta}\frac{\partial}{\partial\theta}\left(\sin\theta\frac{\partial}{\partial\theta}\right)+\frac{1}{\sin^2\theta}\frac{\partial^2}{\partial\varphi^2}\right]+V(r)\right\}$$
$$\times\,\psi(r,\theta,\varphi)=\varepsilon_{int}\psi(r,\theta,\varphi). \tag{57}$$

This form of Schrödinger's equation can be separated with the use of the substitution

$$\psi(r,\theta,\varphi) = R(r)Y(\theta,\varphi). \tag{58}$$

The result is the partial differential equation for $Y(\theta,\varphi)$,

$$\left[\frac{1}{\sin\theta}\frac{\partial}{\partial\theta}\left(\sin\theta\frac{\partial Y(\theta,\varphi)}{\partial\theta}\right)+\frac{1}{\sin^2\theta}\frac{\partial^2 Y(\theta,\varphi)}{\partial\varphi^2}\right]=-\beta Y(\theta,\varphi), \tag{59}$$

and the ordinary differential equation for $R(r)$,

$$\frac{d}{dr}\left(r^2\frac{dR(r)}{dr}\right)+\frac{2\mu r^2}{\hbar^2}[\varepsilon_{int}-V(r)]R(r)=\beta R(r). \tag{60}$$

6.4.2 Spherical harmonics

Equation (59) can be further separated by substituting $Y(\theta, \varphi) = \Theta(\theta)\Phi(\varphi)$ and multiplying by $sin^2\theta$. After division by $\Theta(\theta)\Phi(\varphi)$, the result is

$$\frac{sin\,\theta}{\Theta(\theta)}\frac{\mathrm{d}}{\mathrm{d}\theta}\left(sin\,\theta\frac{\mathrm{d}\Theta(\theta)}{\mathrm{d}\theta}\right) + \frac{1}{\Phi(\varphi)}\frac{\mathrm{d}^2\Phi(\varphi)}{\mathrm{d}\varphi^2} + \beta\, sin^2\theta = 0. \tag{61}$$

Clearly, the second term on the left-hand side is equal to a constant, say $-m^2$. The resulting equation for $\Phi(\varphi)$,

$$\frac{\mathrm{d}^2\Phi(\varphi)}{\mathrm{d}\varphi^2} + m^2\Phi(\varphi) = 0, \tag{62}$$

is of the same form as Eq. (5-29). A particular solution is, therefore, an exponential function of an imaginary argument, *viz.*

$$\Phi(\varphi) = e^{im\varphi}. \tag{63}$$

The coordinate φ is cyclic in the sense that on physical grounds the exponential must have the same value when φ is advanced by 2π. That is, the condition $\Phi(\varphi) = \Phi(\varphi + 2\pi)$ must be fulfilled for the function to be single-valued. Then,

$$\Phi(\varphi) = e^{im\varphi} = e^{im(\varphi+2\pi)} = e^{im\varphi}e^{2\pi im}, \tag{64}$$

which implies $e^{2\pi im} = 1$, and restricts m to the values $0, \pm1, \pm2, \ldots$. The normalization of this function is accomplished with the use of the factor $\mathcal{N}_\varphi$ such that

$$\int_0^{2\pi} \Phi^\star\Phi\mathrm{d}\varphi = \mathcal{N}_\varphi^2\int_0^{2\pi} e^{-im\varphi}e^{im\varphi}\mathrm{d}\varphi = 2\pi\,\mathcal{N}_\varphi^2 = 1. \tag{65}$$

The functions are then given by

$$\Phi(\varphi) = \frac{1}{\sqrt{2\pi}}e^{im\varphi}, \tag{66}$$

with $m = 0, \pm1, \pm2, \ldots$, as before.

The substitution of $-m^2$ for the second term on the left-hand side of Eq. (60) yields the equation for $\Theta(\theta)$,

$$\frac{1}{sin\,\theta}\frac{\mathrm{d}}{\mathrm{d}\theta}\left(sin\,\theta\frac{\mathrm{d}\Theta(\theta)}{\mathrm{d}\theta}\right) - \frac{m^2\Theta(\theta)}{sin^2\theta} + \beta\Theta(\theta) = 0. \tag{67}$$

It is convenient to make the substitutions $z = cos\,\theta$ and $\Theta(\theta) = P(z)$. The result,

$$(1 - z^2)\frac{d^2P(z)}{dz^2} - 2z\frac{dP(z)}{dz} + \left(\beta - \frac{m^2}{1 - z^2}\right)P(z) = 0, \tag{68}$$

is identical to Eq. (5-112). Its solution is expressed in terms of the associated Legendre polynomials, which when normalized, are the functions $\Theta_{\ell,m}(\theta)$, with $\ell = 0, 1, 2, \ldots$ and $m = 0, \pm 1, \pm 2, \ldots, \pm\ell$. Furthermore, the separation constant can be identified as $\beta = \ell(\ell + 1)$, as given by Eq. (5-119). The products

$$\Phi_m(\varphi)\Theta_{\ell,m}(\theta) = Y_\ell^m(\theta, \varphi) \tag{69}$$

are the spherical harmonics [see Eq. (5-129)]. These functions are solutions for the angular dependence of the wavefunction for all central force problems. In real form they are often referred to as atomic orbitals (see Appendix III).

The radial part of the wavefunction depends on the potential function that describes the interaction of the two particles. Several examples which are important in chemistry and physics will now be summarized.

6.5 THE DIATOMIC MOLECULE

Within the framework of the Born–Oppenheimer approximation*, a diatomic molecule consists of two nuclei that are more-or-less attached by the surrounding electron cloud. Often the specific form of the resulting potential function is not known. However, if a chemical bond is formed between the two nuclei, the potential function displays a minimum at a distance that corresponds to the equilibrium bond length. Furthermore, the energy necessary to break the chemical bond, the dissociation energy, is often evaluated by spectroscopic measurements. It can be concluded, then, that the potential function has the general form shown in Fig. 6. A simple derivation of the Born–Oppenheimer approximation is presented in Section 12.1.

In this application Eq. (60) becomes

$$\left[-\frac{\hbar^2}{2\mu r^2}\frac{d}{dr}\left(r^2\frac{dR(r)}{dr}\right) + \frac{\hbar^2 J(J+1)}{2\mu r^2} + V(r)\right]R(r) = \varepsilon_{int}R(r), \tag{70}$$

where μ is now the reduced mass of the two nuclei and, by tradition, the quantum number ℓ has been replaced by the letter J.

*Max Born, British physicist (1882–1970); Julius Robert Oppenheimer, American physicist (1904–1967).

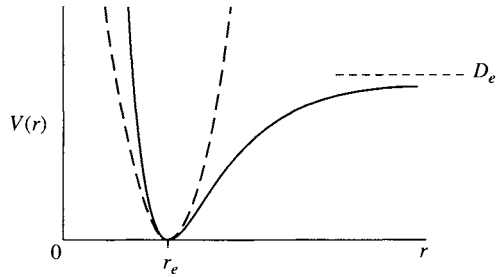

Fig. 6 Potential functions for a diatomic molecule. The dashed curve represents the harmonic approximation.

6.5.1 The rigid rotator

In the simplest case the interatomic distance is held constant, *e.g.* $r = r_e$ and the potential energy is set equal to zero at this point. Furthermore, as $r = r_e$ is constant, the first term on the left-hand side of Eq. (70) vanishes. These conditions describe the rigid rotator, for which the energy is given by

$$\varepsilon_{rr} = \frac{\hbar^2 J(J+1)}{2\mu r_e^2}, \tag{71}$$

with $J = 0, 1, 2, \ldots$, as before. The quantity $I_e = \mu r_e^2$ is the moment of inertia of the rigid diatomic molecule.

6.5.2 The vibrating rotator

Returning now to the general expression for $R(r)$ [Eq. (70)], it is convenient to change the dependent variable by substituting $R(r) = (1/r)S(r)$. The result is

$$\frac{\mathrm{d}^2 S(r)}{\mathrm{d}r^2} + \frac{2\mu}{\hbar^2}\left[-\frac{\hbar^2 J(J+1)}{2\mu r^2} + \varepsilon_{int} - V(r)\right] S(r) = 0. \tag{72}$$

As the molecule executes small-amplitude vibrations with respect to the equilibrium internuclear distance, it is appropriate to develop the potential function in a Taylor series about that position. Thus,

$$V(r) = V_e + \left.\frac{\mathrm{d}V}{\mathrm{d}r}\right|_e (r - r_e) + \frac{1}{2}\left.\frac{\mathrm{d}^2 V}{\mathrm{d}r^2}\right|_e (r - r_e)^2 + \cdots . \tag{73}$$

The potential energy can be set equal to zero at the equilibrium position; then, $V_e = 0$. Furthermore, at equilibrium the potential is minimal,

$$\left.\frac{\mathrm{d}V}{\mathrm{d}r}\right|_e = 0.$$

And, in the harmonic approximation cubic and higher terms are neglected, so that Eq. (73) becomes

$$V(r) = \frac{1}{2}\kappa(r - r_e)^2, \tag{74}$$

the harmonic potential function shown in Fig. 6. The force constant is defined by

$$\kappa \equiv \left.\frac{\mathrm{d}^2V}{\mathrm{d}r^2}\right|_e,$$

the curvature of the potential function evaluated at the equilibrium position. Higher terms in Eq. (73) contribute to the anharmonicity of the vibration. This question will be discussed in Chapter 9.

In the rigid-rotator, harmonic-oscillator approximation Eq. (72) becomes

$$\frac{\mathrm{d}^2S(r)}{\mathrm{d}r^2} + \frac{2\mu}{\hbar^2}\left[-\frac{\hbar^2 J(J+1)}{2\mu r^2} + \varepsilon_{int} - V(r)\right]S(r) = 0, \tag{75}$$

where $\varepsilon = \varepsilon_{vib} + \varepsilon_{rr}$ and $x = r - r_e$. Equation (75) can be put into the form of Eq. (32) by analogous substitutions. Thus, $\varepsilon_{vib} = h\nu^0(v + \frac{1}{2})$, with $\nu^0 = \sqrt{\kappa/\mu}/2\pi$ and $v = 0, 1, 2, \ldots$, as before. The result yields an expression which is the sum of the energy of a harmonic oscillator and that of a rotating molecule which does not oscillate! In spite of this apparent contradiction, the result is the starting point for the interpretation of the rotation–vibration spectrum of a diatomic molecule, as observed, for example, in the mid-infrared spectral region.

6.5.3 Centrifugal forces

A simple improvement on this model can be made by remarking that the first term in brackets in Eq. (72) contains the factor $1/r^2$. As the amplitude of the vibration is small, a binomial series development can be made (see Section 2.10), namely,

$$\frac{1}{r^2} = \frac{1}{(r_e + x)^2} = \frac{1}{r_e^2}\left(1 - \frac{2x}{r_e} + \frac{3x^2}{r_e^2} - \cdots\right), \tag{76}$$

where $r = r_e + x$. Clearly, the rigid-rotator approximation employed above corresponds to $x = 0$ in Eq. (76). If, however, the linear term in x is retained, the effect of the centrifugal force can be estimated.

Reconsideration of Eq. (72) with

$$\frac{1}{r^2} = \frac{1}{r_e^2}\left(1 - \frac{2x}{r_e}\right),$$

suggests a suitable substitution by translation of the x axis, namely $x = \zeta + a$, that will immediately simplify the problem. The constant a is chosen by setting the resulting linear terms in ζ equal to zero. The result is

$$a = -\frac{\hbar^2 J(J+1)}{\kappa \mu r_e^3}. \tag{77}$$

With $\varepsilon = \varepsilon_{vib} - \varepsilon_{rr}$, as before, Eq. (75) becomes

$$\frac{\mathrm{d}^2 S(\varsigma)}{\mathrm{d}\varsigma^2} + \frac{2\mu}{\hbar^2}\left[\varepsilon_{vib} - \frac{\hbar^4 J^2 (J+1)^2}{2\kappa \mu^2 r_e^6} - \frac{1}{2}\kappa \varsigma^2\right] S(\varsigma) = 0. \tag{78}$$

This equation can be identified as that of the harmonic oscillator, with a supplementary constant term inside the brackets. The energy of the rotating, vibrating molecule is then given by

$$\varepsilon = h\nu^0\left(v + \frac{1}{2}\right) + \frac{\hbar^2 J(J+1)}{2\mu r_e^2} - \frac{\hbar^4 J^2 (J+1)^2}{2\kappa \mu^2 r_e^6}. \tag{79}$$

The first term, with $v = 0, 1, 2, \ldots$, is the energy of the harmonic oscillator. The second, with $J = 0, 1, 2, \ldots$, is that of the rigid rotator, while the last term expresses the nonrigidity of the rotating molecule. Classically speaking, as the molecule turns more rapidly, the bond length increases due to centrifugal force and, thus, the energy decreases – as expressed by the negative sign in Eq. (79).

The energy of the diatomic molecule, as given by Eq. (79) does not take into account the anharmonicity of the vibration. The effect of the cubic and quartic terms in Eq. (73) can be evaluated by application of the theory of perturbation (see Chapter 12).

6.6 THE HYDROGEN ATOM

The representation of the angular part of the two-body problem in spherical harmonics, as developed in Section 6.4, is applicable to any system composed

of two spherical particles in free space. For the hydrogen atom, composed of a proton and an electron, the reduced mass is equal to

$$\mu = \frac{m_e m_p}{m_e + m_p} \approx m_e, \tag{80}$$

where the approximation in which μ is replaced by the mass electronic m_e is satisfactory in most chemical applications (see problem 9).

6.6.1 Energy

The interaction between the two particles in this system is described by Coulomb's law,* in which the force is proportional to the inverse-square of the distance between the particles and $-e^2$ is the product of the charges on the electron and the proton. The corresponding potential function is then of the form

$$V(r) = -\frac{e^2}{4\pi\varepsilon_0 r}, \tag{81}$$

as, $\boldsymbol{f} = -\nabla V(r)$. The constant $4\pi\varepsilon_0$ in the denominator of Eq. (81) arises if international units are employed. With this potential function, as shown in Fig. 7, the radial equation [Eq. (60)] can be written for the hydrogen atom as

$$\left[-\frac{\hbar^2}{2\mu r^2}\frac{\mathrm{d}}{\mathrm{d}r}\left(r^2\frac{\mathrm{d}}{\mathrm{d}r}\right) + \frac{\hbar^2\ell(\ell+1)}{2\mu r^2} - \frac{e^2}{4\pi\varepsilon_0 r}\right]R(r) = \varepsilon R(r), \tag{82}$$

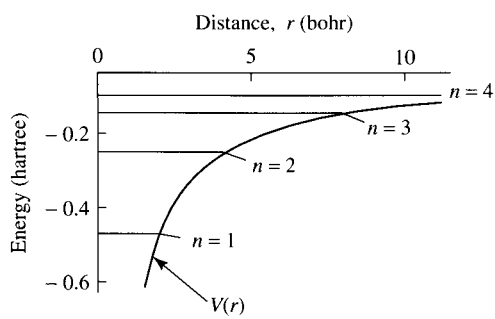

Fig. 7 The potential function $V(r)$ and the energy levels for the hydrogen atom.

*Charles de Coulomb, French physicist (1736–1801).

where β has been replaced by $\ell(\ell+1)$. It is now convenient to make the substitutions

$$\alpha^2 = -\frac{2\mu\varepsilon_{int}}{\hbar^2} \text{ and } \gamma = \frac{\mu e^2}{\alpha\hbar^2}.$$

Then, with the change in the independent variable, $\rho = 2\alpha r$, Eq. (82) becomes

$$\frac{\mathrm{d}^2R(\rho)}{\mathrm{d}\rho^2} + \frac{2}{\rho}\frac{\mathrm{d}R(\rho)}{\mathrm{d}\rho} + \left[\frac{\gamma}{\rho} - \frac{\ell(\ell+1)}{\rho^2} - \frac{1}{4}\right]R(\rho) = 0, \tag{83}$$

which is identical to Eq. (5-130). The solutions are then given by the Laguerre polynomials, as summarized in Section 5.5.3. There it was shown that because of the boundary conditions, γ is equal to a positive integer which was identified as the principal quantum number, n. Then, from the substitutions made above, the energy of the hydrogen atom is given by

$$\varepsilon_n = -\left(\frac{\mu e^4}{32\pi^2\varepsilon_0^2\hbar^2}\right)\frac{1}{n^2}, \tag{84}$$

with of course $n = 1, 2, 3, \ldots$. Some of the values of the energy are indicated in Fig. 7, where it is seen that with $n = 1$ the ground-state energy is equal to -13.6 eV or -0.5 hartree.

The spectrum of atomic hydrogen, as observed in absorption or emission, arises from transitions between the various possible states. In emission, a spectral line results from a transition such as $n_2 \to n_1$ and the application of Eq. (84) leads to the expression

$$\frac{\Delta\varepsilon}{hc} = R_H\left(\frac{1}{n_1^2} - \frac{1}{n_2^2}\right), \tag{85}$$

where R_H is known as the Rydberg constant* (see problem 10).

6.6.2 Wavefunctions and the probability density

The radial parts of the wavefunctions for the hydrogen atom can be constructed from the general form of the associated Laguerre polynomials, as developed in Section 5.5.3. However, in applications in physics and chemistry it is often the probability density that is more important (see Section 5.4.1). This quantity in this case represents the probability of finding the electron in the appropriate three-dimensional volume element.

*Johannes Robert Rydberg, Swedish physicist (1854–1919).

As a simple example, consider the hydrogen atom in its ground state, $n = 1$. The radial part of the wavefunction is given by

$$R_{1,0}(r) = 2a_0^{-3/2} e^{-r/a_0}, \tag{86}$$

where

$$a_0 = \frac{4\pi\varepsilon_0\hbar^2}{\mu e^2} = 0.53 \text{ Å} = 1 \text{ bohr}$$

is the radius of the first Bohr orbit.* Although this quantity has no direct significance in modern quantum theory, it serves as a useful measure of distance on the atomic scale (see Appendix II). A number of the radial functions are given in Appendix IV. For the ground state the probability density is then of the form

$$P_{1,0}(r) = [R_{1,0}(r)]^2 r^2 = \frac{4r^2}{a_0^3} \mathrm{e}^{-2r/a_0}. \tag{87}$$

It is plotted in Fig. 8.

It is of interest to determine the position of the maximum of the function $P_{1,0}(r)$, as this distance describes the effective radius of the hydrogen atom in its ground state. The derivative of Eq. (87) is equal to

$$\frac{\mathrm{d}P_{1,0}(r)}{\mathrm{d}r} = \frac{8r}{a_0^3}\left(1 - \frac{r}{a_0}\right)\mathrm{e}^{-2r/a_0}. \tag{88}$$

This function is equal to zero at the origin, at infinity and, of course at $r = a_0 = 0.53$ Å, the position of the maximum. It is perhaps surprising that the

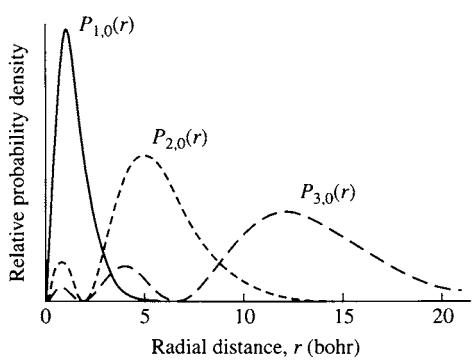

Fig. 8 Radial probability density for the hydrogen atom in ns states.

*Niels Bohr, Danish physicist (1885–1962).

most probable radial distance of the electron corresponds exactly to the radius of the first orbit in the old quantum theory. However, it must be emphasized that the probability distribution is now spherical, with a diameter of $2a_0$, or approximately one Ångström* (10^{-10} m) for the atom in its ground state.

6.7 BINARY COLLISIONS

6.7.1 Conservation of angular momentum

The interaction of two particles was analyzed classically in Section 6.3.1. The resulting expression for the relative momentum can be written in vector notation as

$$\boldsymbol{p} = \mu \dot{\boldsymbol{r}}. \tag{89}$$

Then, following Newton,

$$\dot{\boldsymbol{p}} = \mu \ddot{\boldsymbol{r}} = \boldsymbol{f} \tag{90}$$

or

$$\ddot{\boldsymbol{r}} = \frac{\boldsymbol{f}}{\mu}. \tag{91}$$

Vector multiplication of Eq. (91) by $\boldsymbol{r}$ yields

$$\boldsymbol{r} \times \ddot{\boldsymbol{r}} = \frac{1}{\mu} \boldsymbol{r} \times \boldsymbol{f} = 0. \tag{92}$$

But the left-hand side of Eq. (92) can be developed [Eq. (4-41)] as

$$\boldsymbol{r} \times \ddot{\boldsymbol{r}} = \frac{\mathrm{d}}{\mathrm{d}t}(\boldsymbol{r} \times \dot{\boldsymbol{r}}) - (\dot{\boldsymbol{r}} \times \dot{\boldsymbol{r}}) = 0, \tag{93}$$

and thus,

$$\frac{\mathrm{d}}{\mathrm{d}t}(\boldsymbol{r} \times \dot{\boldsymbol{r}}) = 0 \tag{94}$$

and by integration,

$$\boldsymbol{r} \times \dot{\boldsymbol{r}} = \boldsymbol{C}. \tag{95}$$

The vector $\boldsymbol{C}$ is a constant which is perpendicular to the plane defined by $\boldsymbol{r}$ and the corresponding velocity $\dot{\boldsymbol{r}}$, and hence the momentum $\boldsymbol{p}$. This plane, which is called the collision plane, can be employed to describe the entire encounter between the two particles.

*Andres Jonas Ångström, Swedish physicist (1814–1871).

6.7.2 Conservation of energy

The kinetic energy of the hypothetical particle of mass μ in the collision plane, perpendicular to the z axis, can be expressed by

$$T = \tfrac{1}{2}\mu(\dot{x}^2 + \dot{y}^2), \tag{96}$$

or, in polar coordinates, with the substitutions $x = r\,cos\,\vartheta$ and $y = r\,sin\,\vartheta$, by

$$T = \tfrac{1}{2}\mu(\dot{r} + r^2\dot{\vartheta}^2). \tag{97}$$

The total energy is then the sum of Eq. (97) and the appropriate potential function for the particle interaction.

It is useful to define two parameters that, with the potential function, characterize the collision, namely,

(i) The impact parameter b, which is the distance of closest approach in the absence of the potential, and

(ii) The initial relative speed g of the colliding particles.

Before the advent of the collision ($r = \infty$) the potential is equal to zero and the kinetic energy $\frac{1}{2}\mu g^2$ is the total energy of the system. Furthermore, the angular momentum is given by $\mu g b$. Thus, the conservation of energy and angular momentum throughout the collision can be written as

$$\tfrac{1}{2}\mu g^2 = \tfrac{1}{2}\mu(\dot{r} + r^2\dot{\vartheta}^2) + V(r) \tag{98}$$

and

$$\mu b g = \mu r^2 \dot{\vartheta}, \tag{99}$$

respectively, where the right-hand side of Eq. (99) is obtained by taking the partial derivative of Eq. (97) with respect to $\dot{\vartheta}$. Equations (98) and (99) can be combined by eliminating $\dot{\vartheta}$ to yield

$$\tfrac{1}{2}\mu g^2 = \tfrac{1}{2}\mu\dot{r}^2 + \frac{1}{2}\mu g^2\left(\frac{b}{r}\right)^2 + V(r). \tag{100}$$

Integration of Eq. (100) allows r to be determined as a function of time; *i.e.* the trajectory of the collision can be specified if the potential function is known.

6.7.3 Interaction potential: LJ (6-12)

Many different empirical or semi-empirical functions have been suggested to represent the interaction between two spherical particles. The most successful

is certainly that of Lennard-Jones.* Specifically, it is the Lennard-Jones (6-12) function, which has the form

$$V(r) = 4\varepsilon\left[\left(\frac{\sigma}{r}\right)^{12} - \left(\frac{\sigma}{r}\right)^{6}\right], \tag{101}$$

where the parameter σ, an effective molecular diameter, is the value of r for which $V(r) = 0$. The minimum in the potential-energy curve occurs at $r = \sqrt[6]{\sigma}$, where its depth is equal to ε. The inverse sixth power of r represents the attractive forces which exist even between spherical particles. They are due to dispersion (London†) forces, as well as dipole–induced-dipole forces which are present when the particles are polar. The inverse twelfth function of the distance is an empirical representation of the repulsive forces, which increase rapidly at short distances. It is used for mathematical convenience. In general, the Lennard-Jones (6-12) potential function provides a useful and reliable representation of the interaction of atoms and nonpolar – or slightly polar – molecules.

A typical Lennard-Jones (6-12) function is plotted in Fig. 9. Often, the second term on the right-hand side of Eq. (100) is added to represent an effective potential function, *viz.*

$$V_{eff}(r) = V(r) + \tfrac{1}{2}\mu g^2\left(\frac{b}{r}\right)^2. \tag{102}$$

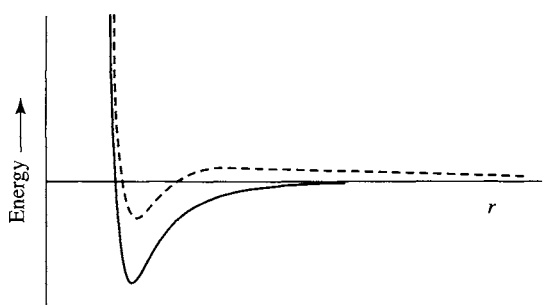

Fig. 9 Solid line: A typical Lennard-Jones (6-12) potential; dotted line: the effective potential for given values of the initial parameters g and b.

*John Edward Lennard-Jones, British theoretical physical chemist (1894–1954).

†Fritz London, German Physicist (1900–1954).

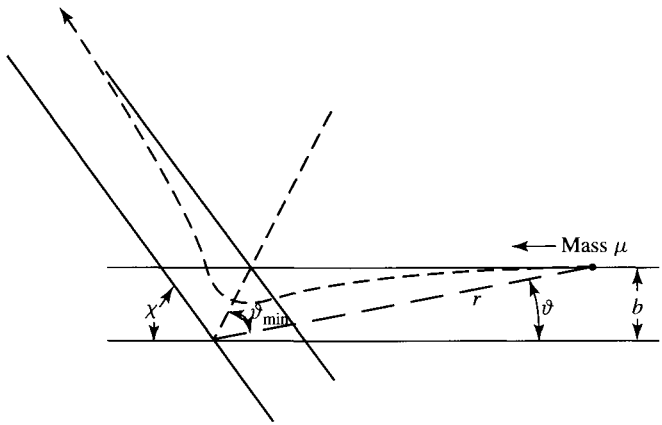

Fig. 10 Binary collision with respect to the center of mass of the system.

The dotted curve shown in Fig. 9 is an example, although it is but one in a family, as the effective potential depends on g and b, the parameters which define the initial conditions of a binary collision.

6.7.4 Angle of deflection

The result of a binary collision is specified in classical mechanics by the angle of deflection, χ. It is defined in Fig. 10, where the trajectory of the hypothetical particle of mass μ is illustrated. It can be seen that when r is minimal, that is at the distance of closest approach, the angle ϑ_{min} is related to the angle of deflection by

$$\chi = \pi - 2\vartheta_{min}. \tag{103}$$

From Eqs. (99) and (100), r and ϑ can be related by

$$\frac{\mathrm{d}r}{\mathrm{d}\vartheta} = \frac{\dot{r}}{\dot{\vartheta}} = -\left(\frac{r^2}{b}\right)\sqrt{1 - \frac{V(r)}{\frac{1}{2}\mu g^2} - \frac{b^2}{r^2}}; \tag{104}$$

the negative sign has been chosen so that r decreases with ϑ along the incoming trajectory. Thus, ϑ_{min} can be calculated from the expression

$$\vartheta_{min} = \int_0^{\vartheta_{min}} \mathrm{d}\vartheta = -b\int_\infty^{r_{min}} \frac{1}{\sqrt{1 - (b^2/r^2) - [V(r)/\frac{1}{2}\mu g^2]}}\frac{\mathrm{d}r}{r^2}, \tag{105}$$

which, with Eq. (103), allows the angle of deflection $\chi(b, g)$ to be determined.

For dilute, real gases, where ternary and higher collisions can be neglected, the angle of deflection can be employed to evaluate a number of physical properties. Of course appropriate distributions of the values of g and b must be introduced. The resulting expressions for the virial coefficients and the transport properties (viscosity, diffusion and thermal conductivity) are quite complicated. The interested reader is referred to advanced books on this subject.

6.7.5 Quantum mechanical description: The phase shift

In the classical picture of two-particle interaction outlined above, it was shown that a specific quantity – the angle of deflection – characterizes a given collision. However, on the atomic-molecular scale, quantum theory is more appropriate. According to the uncertainty principle of Heisenberg,* the simultaneous determination of the position and momentum of a particle cannot be made. Thus, it is not possible to determine exactly the angle of deflection in a collision. In the following development it is found that the phase shift of the radial wave function characterizes a binary, quantum-mechanical collision. This quantity, then, which is analogous to the classical angle of deflection, determines the final quantum-mechanical expressions describing the physical properties of low-pressure, real gases.

The radial equation for the quantum mechanical, two-particle system [Eq. (60)] can be applied to the present problem by employing the identity $\beta = \ell(\ell + 1)$, as before, and making the substitution $R(r) = (1/r)S(r)$ used to obtain Eq. (72). The result is given by

$$\frac{\mathrm{d}^2 S(r)}{\mathrm{d}r^2} + \left\{ -\frac{\ell(\ell+1)}{r^2} + \frac{2\mu}{\hbar^2}[\varepsilon - V(r)] \right\} S(r) = 0. \tag{106}$$

In the case of an ideal gas, $V(r) = 0$ and Eq. (106) becomes

$$\frac{\mathrm{d}^2 S(r)}{\mathrm{d}r^2} + \left\{ -\frac{\ell(\ell+1)}{r^2} + \frac{\mu^2 g^2}{\hbar^2} \right\} S^0(r) = 0, \tag{107}$$

where the total energy has been equated to $\frac{1}{2}\mu g^2$. Equation (106) can be compared to the general form of Bessel's equation given in Section 5.5.5. It is in the present application

$$\frac{\mathrm{d}^2 S^0(r)}{\mathrm{d}r^2} + \left(\alpha^2 - \frac{4p^2 - 1}{4r^2} \right) S^0(r) = 0, \tag{108}$$

*Werner Heisenberg, German physicist (1901–1976).

Table 1 Characteristics of a binary collision.

Classical mechanics	Quantum mechanics
$\chi(b, g)$: Angle of deflection	$\eta_\ell(\alpha)$: Phase shift
b: Impact parameter	ℓ: Angular momentum quantum number
$\mu g b$: Angular momentum	$\hbar\sqrt{\ell(\ell+1)}$: Angular momentum
g: Initial relative speed	$\alpha = \mu g/\hbar = 2\pi/\lambda$: Wavenumber of the deBroglie wave
μg: Relative momentum	$\alpha\hbar$: Relative momentum

with the identifications $\alpha^2 = \mu^2 g^2/\hbar^2$ and $p = \pm(\ell + \frac{1}{2})$. The general solution to Bessel's equation is of the form

$$Z_p(\alpha r) = A_\ell(\alpha) J_{\ell+\frac{1}{2}}(ar) + B_\ell(\alpha) N_{-\ell-\frac{1}{2}}(\alpha r), \tag{109}$$

where $J_{\ell+\frac{1}{2}}(ar)$ and $N_{-\ell-\frac{1}{2}}(\alpha r)$ are the Bessel and Neumann functions, respectively. As the Neumann function becomes infinite in the limit as $r \to \infty$, the coefficient $B_\ell(\alpha)$ must be set equal to zero. Furthermore, the function $J_{\ell+\frac{1}{2}}(ar)$ becomes sinusoidal for large values of r, representing the deBroglie wave of the hypothetical particle.

In the more general problem in which $V(r) \neq 0$, the previous boundary condition is not applicable. Thus, $B_\ell(\alpha) \neq 0$ and the asymptotic solution for large values of r is given by [Eq. (5-148)]

$$S(r) = rR(r) = [A_\ell^2(\alpha) + B_\ell^2(\alpha)]^{1/2} \sin\left[\alpha r - \tfrac{1}{2}\pi\ell + \eta_{\ell(\alpha)}\right]. \tag{110}$$

The argument of the sine in Eq. (110) now contains the phase shift,

$$\eta_\ell(\alpha) = \tan^{-1}[(-1)^\ell B_\ell(\alpha)/A_\ell(\alpha)], \tag{111}$$

which represents the net result of the encounter. This quantity is analogous to the angle of deflection in the classical case.

The results of this section can be summarized by comparison with those of the previous one. Thus, the corresponding quantities in the classical and quantum-mechanical treatments of the collision problem are given in Table 1.

PROBLEMS

1. Derive Eqs. (18) and (20).

2. Derive Eq. (25).

3. Apply the initial conditions for the struck string (ii) to obtain the expression for $y(x, t)$.

4. Carry out the separation of variables to obtain Eq. (30).

5. Verify Eq. (36).

6. Show that the kinetic energy in the two-body problem in terms of momenta is given by Eq. (44).

7. Make the substitution $Y(\theta, \varphi) = \Theta(\theta)\Phi(\varphi)$ in Eq. (59) to obtain Eq. (61).

8. Verify the expression for a, as given by Eq. (77).

9. Calculate the error in the energy of the ground state of the hydrogen atom if the reduced mass of the two-particle system is replaced by the mass of the electron. Ans. 0.05%

10. Calculate the Rydberg constant from the values of the fundamental constants [see Eq. (84) and Appendix II]. Ans. $R_H = 109{,}737.5\ \text{cm}^{-1}$

11. Muonium, "atom number zero", is composed of a positron and an electron. Calculate the Rydberg constant for this species.

Ans. $54{,}898.6\ \text{cm}^{-1}$